BASE ANCHOR

TYPICAL REFERENCE
ON PIPING PLAN

SEE NOTE 4

TYPICAL REFERENCE
ON PIPING ISOMETRIC

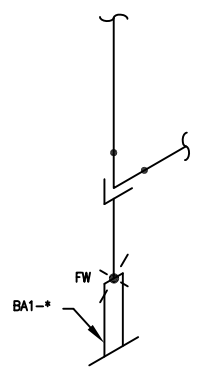

SEE DWG. No. PSS-BA01

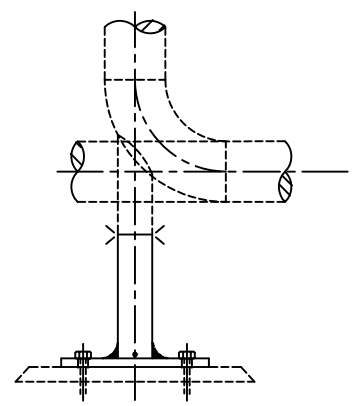

BA1-*

PIPE SIZE NPS 2" THRU NPS 24"

NOTES

1. THIS DRAWING SHALL BE USED FOR SELECTION & APPLICATION ONLY.
   DETAILS OF BASE SUPPORT AND GUIDES ARE SHOWN ON FABRICATION
   FABRICATION AND INSTALLATION DRAWINGS.
2. WHEN THE CONDITION(S) LISTED BELOW EXIST,
   CONSULT STRESS ENGINEER PRIOR TO SELECTION OF ALL BASE SUPPORTS.
   2.1 DESIGN TEMPERATURE OF PIPE BELOW -50°C
   2.2 OPERATING PRESSURE 3000 psig & ABOVE
   2.3 LINE CONNECTED TO RECIPROCATING COMPRESSORS AND PUMPS
   2.4 LINES OPERATING IN A CYCLING AND/OR VIBRATING SERVICE
   2.5 CHROME ALLOYS OF 2 Cr. THRU 17 Cr.
   2.6 COLUMBIUM STABILIZED STAINLESS STEELS (TYPE 347) THICKNESS EXCEEDING 1/4"
   2.7 LINES IN HYDROGEN (700 KPa PARTIAL PRESSURE & ABOVE), & OXYGEN SERVICE.
   2.8 DESIGN TEMPERATURE 750°C & ABOVE
3. PIPE STUBS AND BASE ATTACHMENTS
   3.1 ALL STUBS SHALL BE INSTALLED BY THE PIPING SPOOL FABRICATOR.
   3.2 ALL BASE ATTACHMENTS SHALL BE INSTALLED BY THE MECHANICAL CONTRACTOR
   3.3 STUB LENGTH SHALL BE AS PER ISO OR FABRICATION DWG.
   3.4 STUB MATERIAL SHALL MATCH MATERIAL OF THE SUPPORTED PIPE
4. NOT NORMALLY INDICATED ON PIPING PLAN BUT INDICATED ON SECTION OR ISOMETRIC DETAIL.

DRAWING NO.	REFERENCE DRAWINGS	DRAWING PREPARED BY:

REV.	DESCRIPTION	BY	DATE	CHK	APP.	CLIENT

DRAWN BY:	DATE
DESIGNED BY:	DATE
CHECKED BY:	DATE
APPROVED BY:	DATE
CLIENT BY:	DATE

TITLE
SELECTION & APPLICATION GUIDE FOR BASE ANCHOR

SCALE	JOB NO.	DRAWING NO.	REV.
N.T.S.			

SCALE APPLIES IF PLOTTED ON SIZE "D" (22"X34")